IMET SPA
Località tre fontane, 6 - 24034
Cisano Bergamasco (BG) Italy
Tel +39 035 4387911 | Fax +39 035 787066
imet@imetsaws.com
www.imetsaws.com

MACHINE MODEL

GBS 242 GH

The versatile saw with controlled descent.

Short description

GBS 242 GH is the IMET controlled descent sawing machine. Versatile and easy to use, GBS 242 GH is ideal for maintenance and for small and medium-sized carpentry. The machine performs angled cuts up to 45 ° to the right and 60 ° to the left.

Cutting capacity at 0 °	Round: 250mm - Square: 210mm - Rectangle: 290x210mm0mm
Cutting capacity at 45 ° left	Round: 220mm - Square: 200mm - Rectangle: 210x200mmm
Cutting capacity at 60 ° left	Round: 140mm - Square: 130mm - Rectangle: 140x130mmm
Cutting capacity at 45 ° right	Round: 170mm - Square: 170mm - Rectangle: 170x170mmm
Cutting capacity at 0 ° (solid - C45))	150mm
Blade size	2965x27x0,9mm
Blade motor	1.1/1.3 KW
Blade speed	35/70 m/min
Height of the work surface	940mm
Weight	290kg
Dimensions	1500x1250x1700mm

IMET SPA
Località tre fontane, 6 - 24034
Cisano Bergamasco (BG) Italy
Tel +39 035 4387911 | Fax +39 035 787066
imet@imetsaws.com
www.imetsaws.com

Features

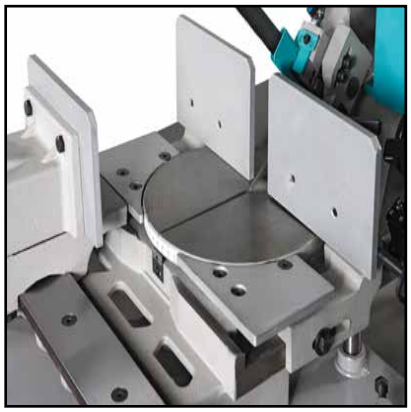

Working Surface

GBS 242 GH has a large worktop with rotation integral with the bow designed to avoid incisions on the same on a ball bearing for easy rotation.

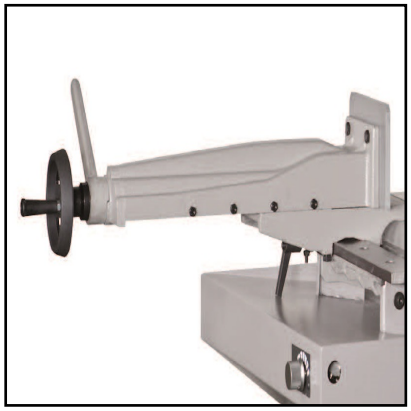

Vice

The vice with adjustable guides, sliding transversally on the work surface and quick approach to the cutting material.

Blade guides

The blade guide of the GBS 242 GH are equipped with carbide inserts and additional front bearings for optimal blade alignment.

Bimetal blade

The bimetal blade has a size of 2965x27x0.9mm with a speed of use between 35 and 70 meters per minute making it the ideal tool for processing steel and cast iron.

IMET SPA
Località tre fontane, 6 - 24034
Cisano Bergamasco (BG) Italy
Tel +39 035 4387911 | Fax +39 035 787066
imet@imetsaws.com
www.imetsaws.com

Autonomous cut

The controlled descent system is equipped with an automatic operation with a 3-position selector for: - Manual cutting - Quick approach to the material - Automatic cut with autonomous descent, adjustable stop and end cut microswitch

WS Bar Support (Optional) OPTIONAL

Support element adjustable in height from 710 to 1100mm. Width 260mm, capacity 150kg.

Connection for loading table (Optional) OPTIONAL

Connecting element for roller table for the loading side.

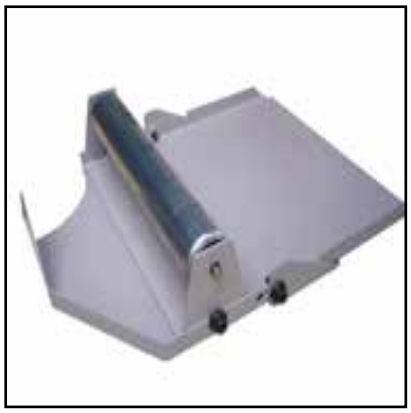

Connection for unloading table (Optional) OPTIONAL

Connecting element for roller table for the unloading side.

IMET SPA
Località tre fontane, 6 - 24034
Cisano Bergamasco (BG) Italy
Tel +39 035 4387911 | Fax +39 035 787066
imet@imetsaws.com
www.imetsaws.com

Loading/Unloading table (Optional) OPTIONAL

First element for roller table compatible for both the loading side and the unloading side. Length 2m, capacity 700kg.

Loading/Unloading table (Optional) OPTIONAL

Following element for roller table compatible for both loading and unloading side Length 2m, capacity 600 kg

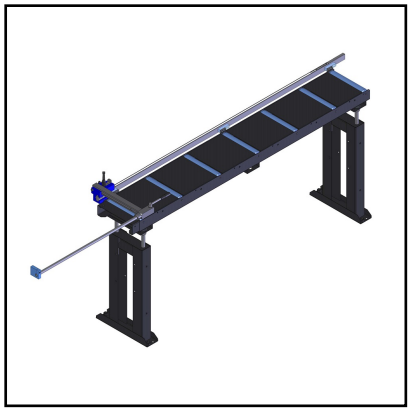

Unloading roller table with metric rod and length stop (Optional) OPTIONAL

Measuring system for the output side consisting of the RTS roller table and mechanical measuring stop with millimetric rod in assembly kit (the roller table is sent separately and the RTM stop to be assembled). The measuring stop is completely foldable.

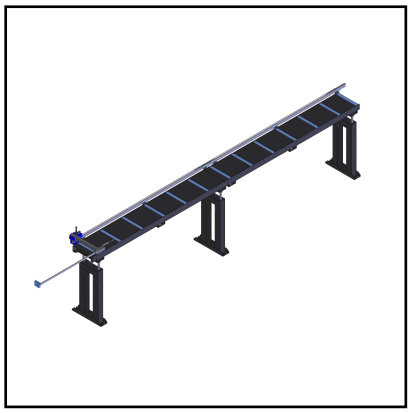

Unloading roller table with metric rod and length stop (Optional) OPTIONAL

Measuring system for the output side consisting of the RTS roller table and mechanical measuring stop with millimetric rod in assembly kit (the roller table is sent separately and the RTM stop to be assembled). The measuring stop is completely foldable. Following element fo cutting length over 2m.

IMET SPA
Località tre fontane, 6 - 24034
Cisano Bergamasco (BG) Italy
Tel +39 035 4387911 | Fax +39 035 787066
imet@imetsaws.com
www.imetsaws.com

Pair of vertical rollers (Optional) OPTIONAL

Pair of containment vertical rollers 300mm,made in steel,max 2 pairs for each element ,2m long to be used without rollers cover (only for RTS).